1882722
Brussels Side Table
Parts and Hardware List

A.	Top Assembly	1 pc
B.	Legs	4 pcs
C.	Allen Head Bolts	8 pcs
D.	Lock Washers	8 pcs
E.	Flat Washers	8 pcs
F.	Allen Head Wrench	1 pc
G.	Phillips Head Screwdriver	1 pc
H.	Phillips Head Bolt	1 pc
J.	Drawer Pull	1 pc

* Please make sure that you have all the parts and hardware indicated above before you begin assembly of this item.
* Use the hardware illustrations to determine correct piece and size.
* This item should be assembled on a soft surface to prevent scratching the finish during assembly.
* This item may require periodic tightening.

Hardware Illustrations

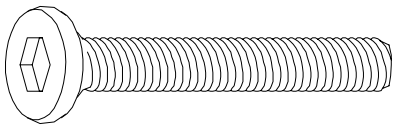

C. Allen Head Bolt

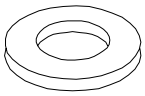

E. Flat Washer

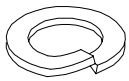

D. Lock Washer

1882722
Brussels Side Table

Attach the Legs

Parts required

A.	Top Assembly	1 pc	D.	Lock Washers	8 pcs
B.	Legs	4 pcs	E.	Flat Washers	8 pcs
C.	Allen Head Bolts	8 pcs	F.	Allen Head Wrench	1 pc

1. Place the Top Assembly (A) up side down on a soft surface.
2. **Attach the Legs (B).** Attach the Legs (B) to each block and secure with the Allen Head Bolts (C) , Lock Washers (D), Flat Washers (E) and Allen Head Wrench (F). See illustration #1

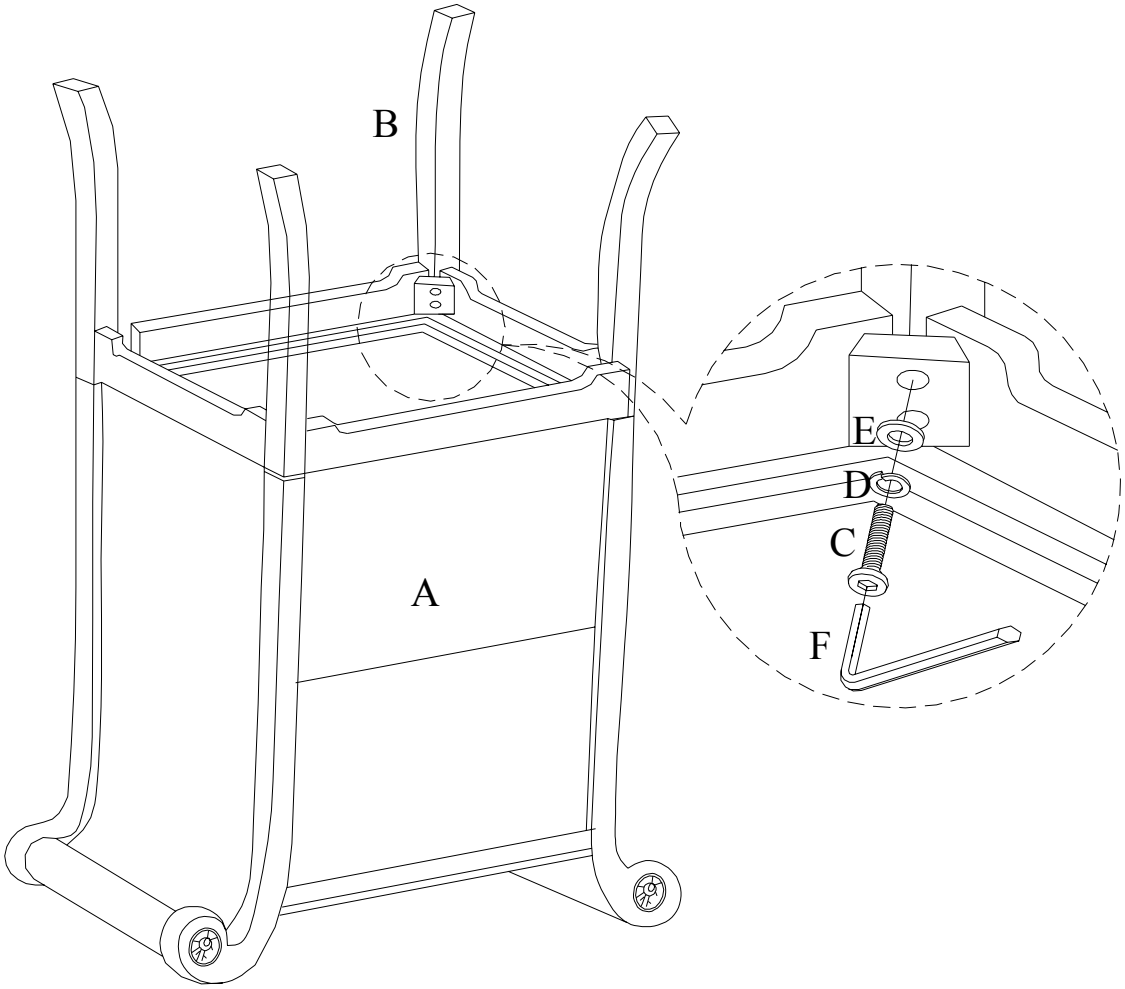

Illustration # 1

1882722
Brussels Side Table

Attach the Drawer Pull

Parts required

G.	Phillips Head Screwdriver	1 pc	J.	Drawer Pull	1 pc
H.	Phillips Head Bolt	1 pc			

1. Turn the table up right. Slide out the drawer. Unscrew the Drawer Pull (J) from inside the drawer by using Phillips Head Screwdriver (G).
2. **Attach the Drawer Pull (J).** Secure the Drawer Pull (J) to the drawer's front panel with Phillips Head Screwdriver (G) and Phillips Head Bolt (H). See illustration #2

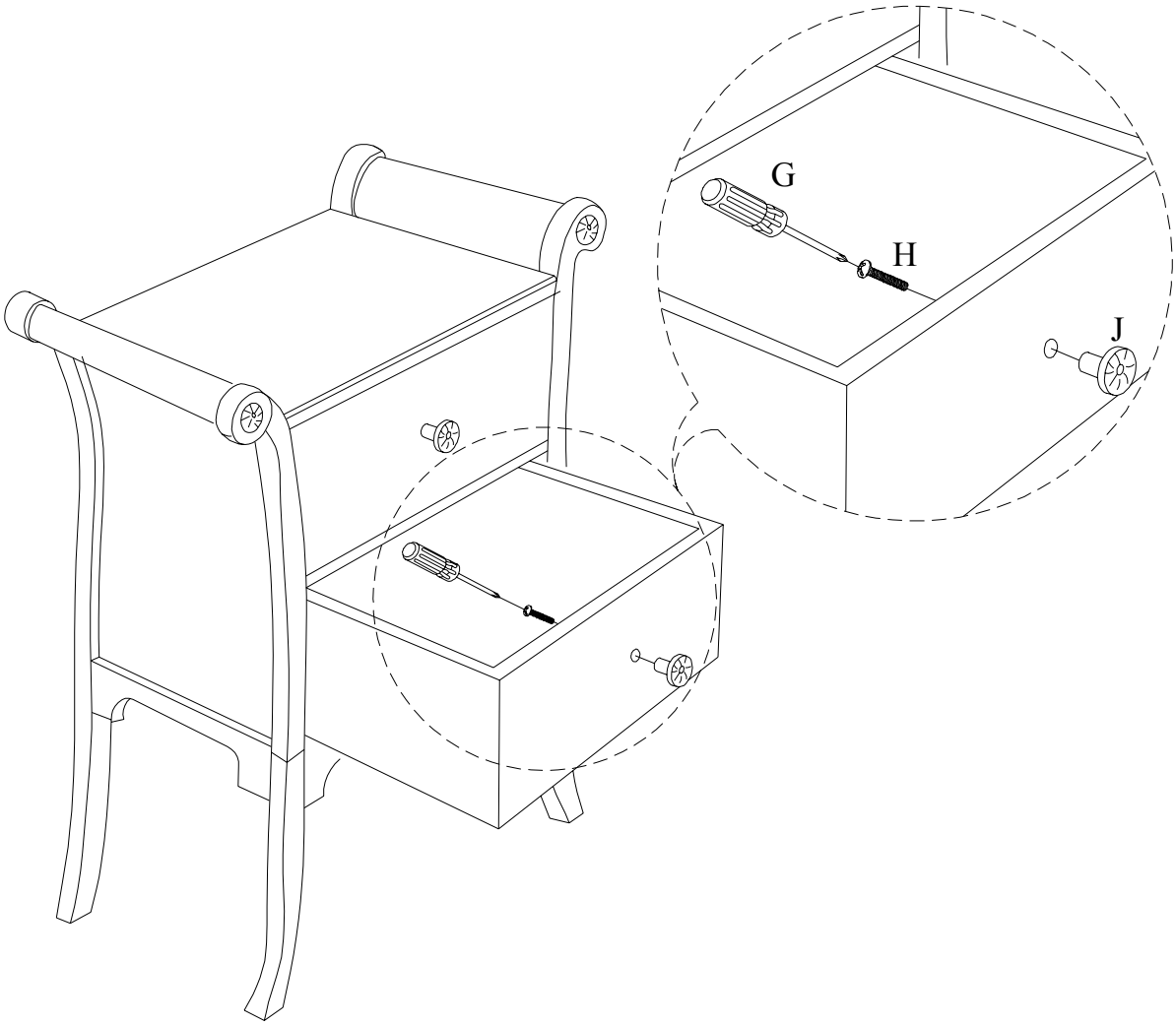

Illustration # 2